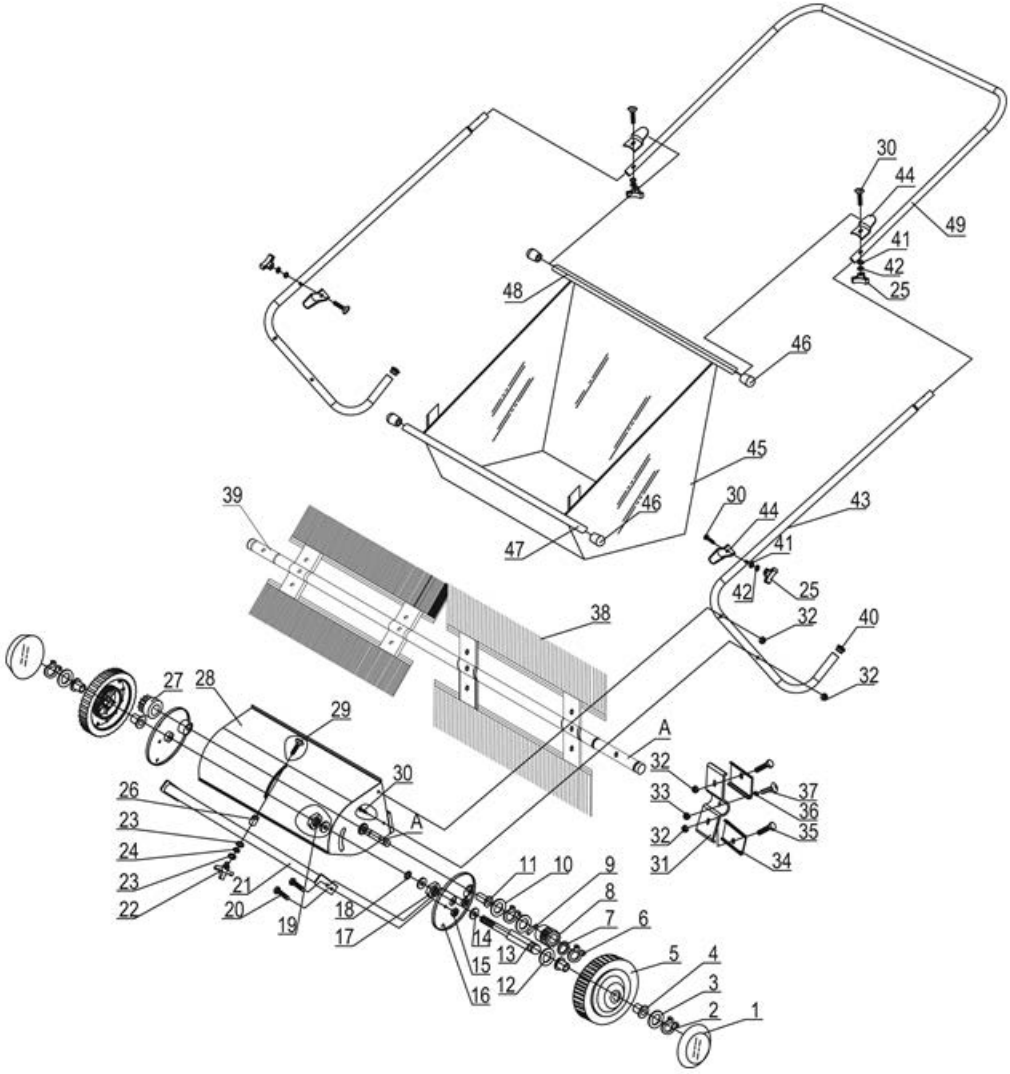
30
44
49
41
42
25
48
46
45
46
47
39
30
44
43
41
42
25
38
32
40
32
27
28
29
A
32
30
33
37
36
26
23
A
32
35
24
31
34
23
21
11
10
9
22
20
19
18
8
7
6
17
14
13
15
12
16
5
4
3
2
1

Lp	Kod	Nazwa	Ilość
1	SP31110-1	Plastic Cover for wheel	2
2	SP31110-2	Back Ring Ø16	2
3	SP31110-3	Flat Washer Ø16	2
4	SP31110-4	Bushing	4
5	SP31110-5	Wheel	2
6	SP31110-6	Back Ring Ø15	4
7	SP31110-7	Washer for Adjustment B	2
8	SP31110-8	Pinion Gear L.H.	1
9	SP31110-9	Pin of Gear	2
10	SP31110-10	Washer for Adjustment A	4
11	SP31110-11	Bearing for Brush	2
12	SP31110-12	Washer for Adjustment F	2
13	SP31110-13	Wheel Axle	2
14	SP31110-14	Big Washer Ø10	6
15	SP31110-15	Nylon Lock Nut M8	4
16	SP31110-16	Dust Cover Assembly	2
17	SP31110-17	Hex Nut M10	2
18	SP31110-18	Endplate Bushing	2
19	SP31110-19	Nylon Lock Nut M10	2
20	SP31110-20	Hex Bolt M8×12	4
21	SP31110-21	Connect Tube	1
22	SP31110-22	Knob	1
23	SP31110-23	Big Flat Washer Ø8	2
24	SP31110-24	Wave Washer	1
25	SP31110-25	Handle Knob	4
26	SP31110-26	Cushion Washer	1
27	SP31110-27	Pinion Gear R.H.	1
28	SP31110-28	Housing Assembly	1
29	SP31110-29	Carriage Bolt M8×55	1
30	SP31110-30	Carriage Bolt M6×30	8
31	SP31110-31	Brush Clamp	4
32	SP31110-32	Nylon Lock Nut M6	12
33	SP31110-33	Nylon Lock Nut M5	4
34	SP31110-34	Brush Retainer	8
35	SP31110-35	Hex Bolt M6×20	8
36	SP31110-36	Star Washer Ø5	4
37	SP31110-37	Hex Bolt M5x25	4
38	SP31110-38	Brush	4
39	SP31110-39	Brush Axle	1
40	SP31110-40	Plug	2
41	SP31110-41	Flat Washer Ø6	4
42	SP31110-42	Lock Washer Ø6	4
43	SP31110-43	Support Leg	2
44	SP31110-44	Bag Rod Clip	4
45	SP31110-45	Hopper Bag	1
46	SP31110-46	Plastic End Cover	2
47	SP31110-47	Short Bag Rod	1
48	SP31110-48	Long Bag Rod	1
49	SP31110-49	Handle Frame	1